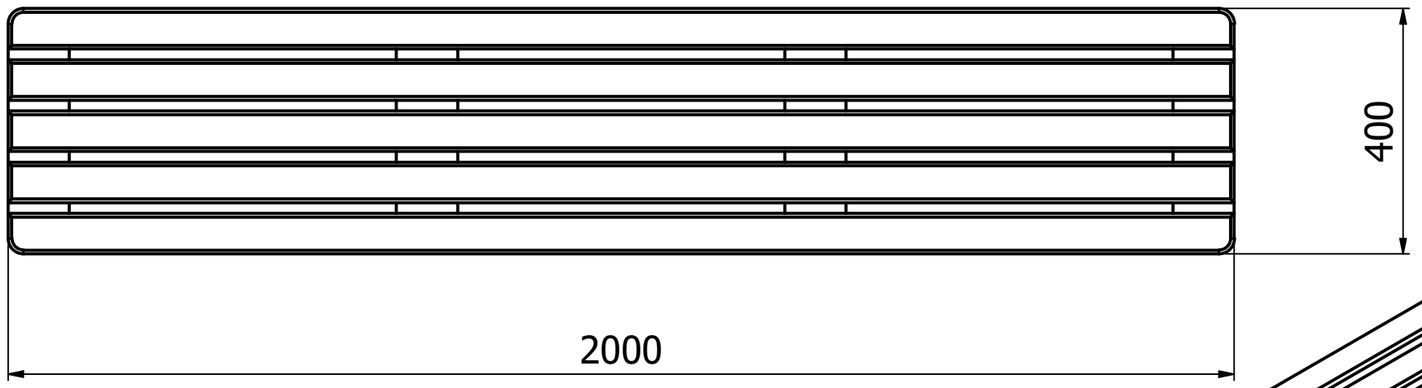

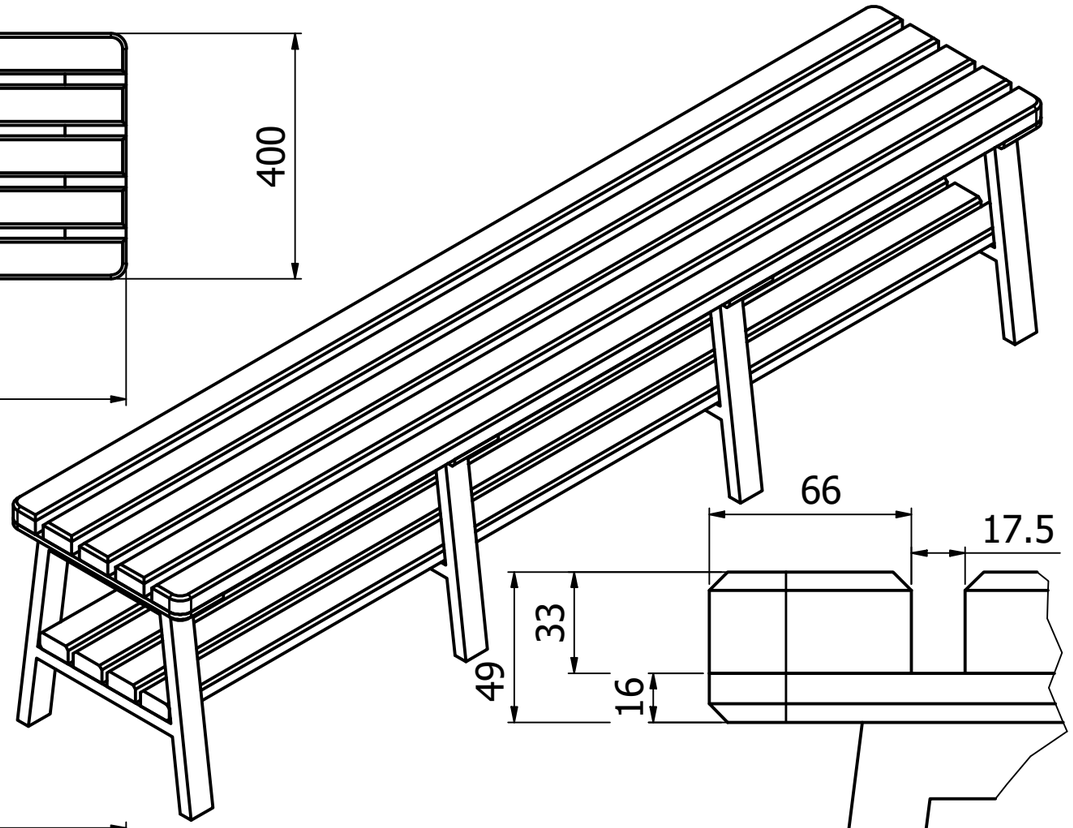

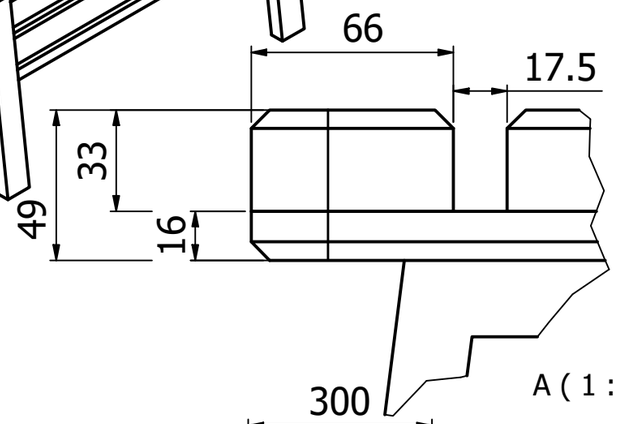

A (1 : 2)

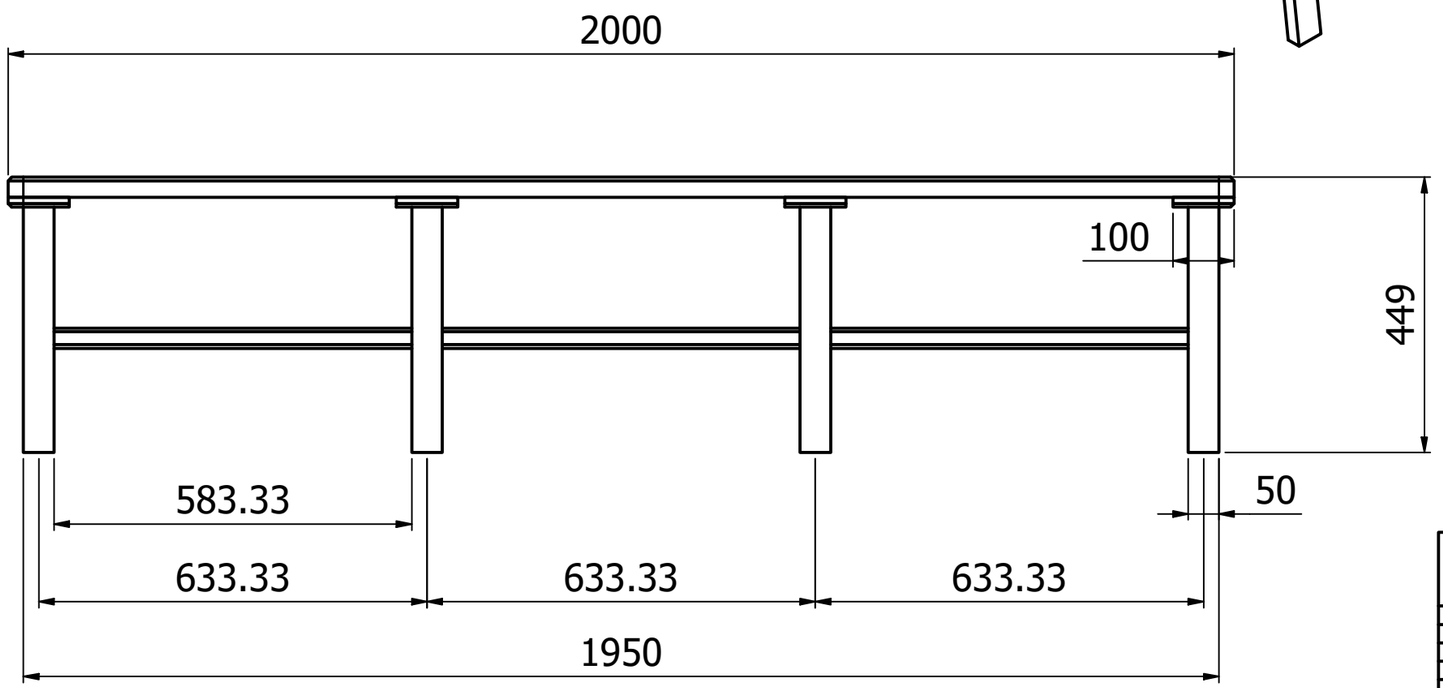

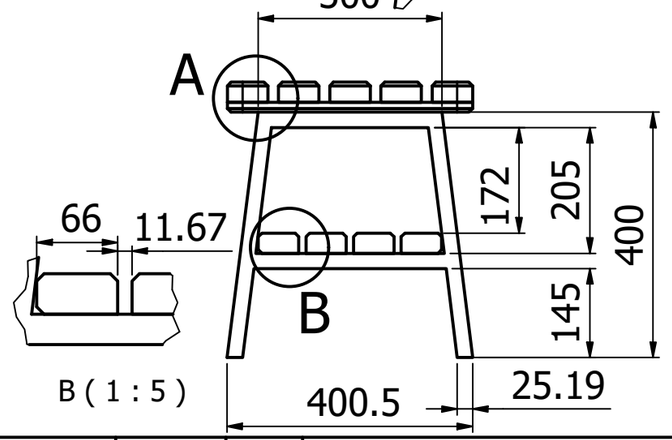

B (1 : 5)

	Name	Date
Author	SSRU	20-Nov-24
Checked		
Approved		

long bench

1 / 1

A3